	Projected area
Top-View	0.020（㎡）
Side-View	0.025 （㎡）

Except the Adapter box

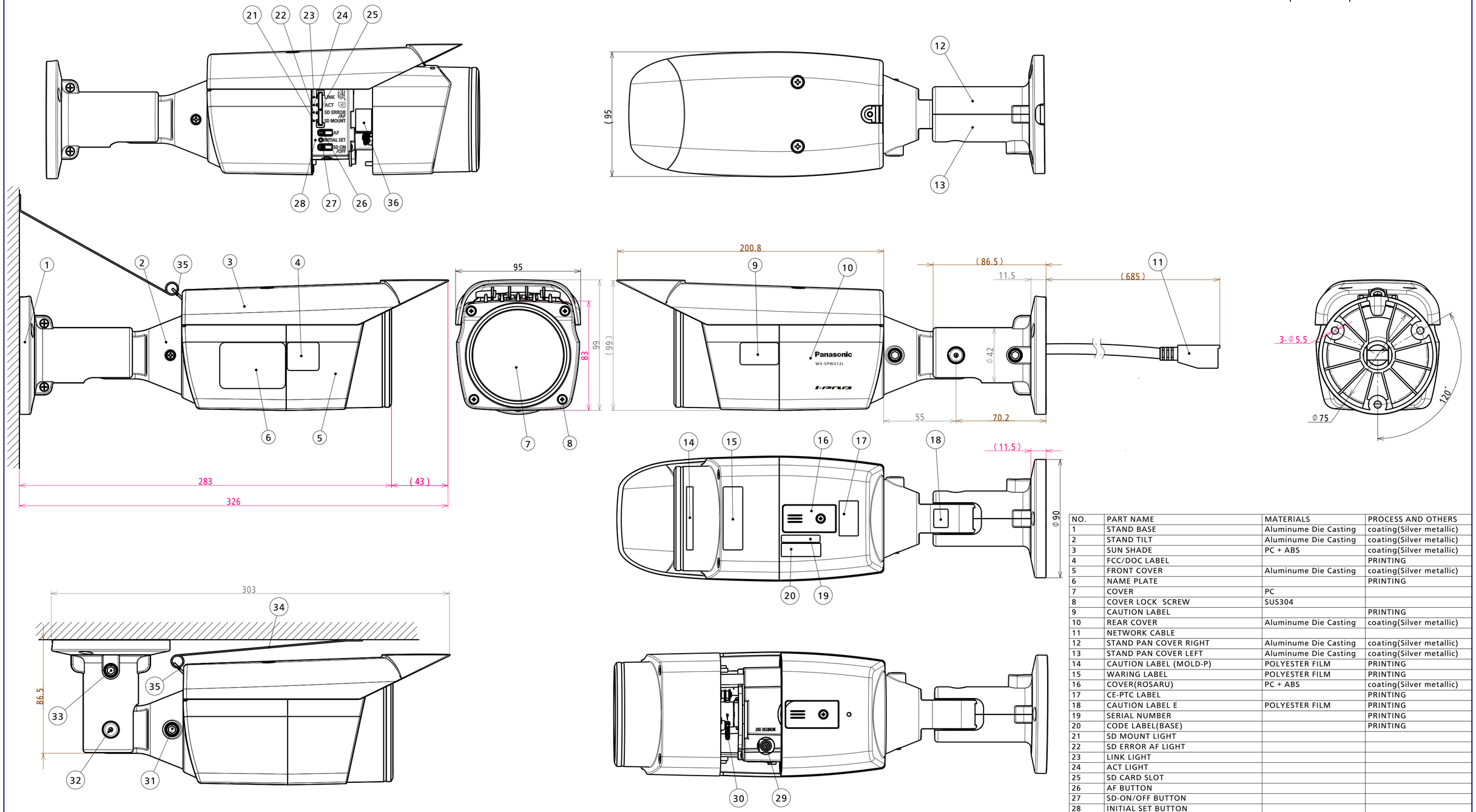

NO.	PART NAME	MATERIALS	PROCESS AND OTHERS
1	STAND BASE	Aluminume Die Casting	coating(Silver metallic)
2	STAND TILT	Aluminume Die Casting	coating(Silver metallic)
3	SUN SHADE	PC + ABS	coating(Silver metallic)
4	FCC/DOC LABEL		PRINTING
5	FRONT COVER	Aluminume Die Casting	coating(Silver metallic)
6	NAME PLATE		PRINTING
7	COVER	PC	
8	COVER LOCK SCREW	SUS304	
9	CAUTION LABEL		PRINTING
10	REAR COVER	Aluminume Die Casting	coating(Silver metallic)
11	NETWORK CABLE		
12	STAND PAN COVER RIGHT	Aluminume Die Casting	coating(Silver metallic)
13	STAND PAN COVER LEFT	Aluminume Die Casting	coating(Silver metallic)
14	CAUTION LABEL (MOLD-P)	POLYESTER FILM	PRINTING
15	WARING LABEL	POLYESTER FILM	PRINTING
16	COVER(ROSARU)	PC + ABS	coating(Silver metallic)
17	CE-PTC LABEL		PRINTING
18	CAUTION LABEL E	POLYESTER FILM	PRINTING
19	SERIAL NUMBER		PRINTING
20	CODE LABEL(BASE)		PRINTING
21	SD MOUNT LIGHT		
22	SD ERROR AF LIGHT		
23	LINK LIGHT		
24	ACT LIGHT		
25	SD CARD SLOT		
26	AF BUTTON		
27	SD-ON/OFF BUTTON		
28	INITIAL SET BUTTON		
29	MONITOR OUT		
30	ZOOM LEVER ADJUSTMENT HANDLE	SUS303	
31	YAW ADJUSTMENT SCREW	SUS304	
32	TILT ADJUSTMENT SCREW	SUS304	
33	PAN ADJUSTMENT SCREW	SUS304	
34	SAFETY WIRE		
35	MOUNT ANGLE (BOX WALL)	SUS304	
36	CHANGE TO PAL LABEL		PRINTING

Unit:mm

WV-SPW312L