・パナソニックグループ化学物質管理ランク指針最新版（製品版）を遵守すること。
.URL:http://panasonic.co.jp/procurement/green
.Observe the Panasonic Group Chemical Substances management Rank Guidelines latest version <For products>.
.URL:http://panasonic.net/procurement/green

SYM.	DATE	REVISION	SIGNED	CHECKED
1 X7	20140421	添加CE标签，去除安装座	郝连喜	唐雷钧
2 X6	20140714	更新警告LOGO版本，将安装座添加进外观图	郝连喜	唐雷钧
3				
4				

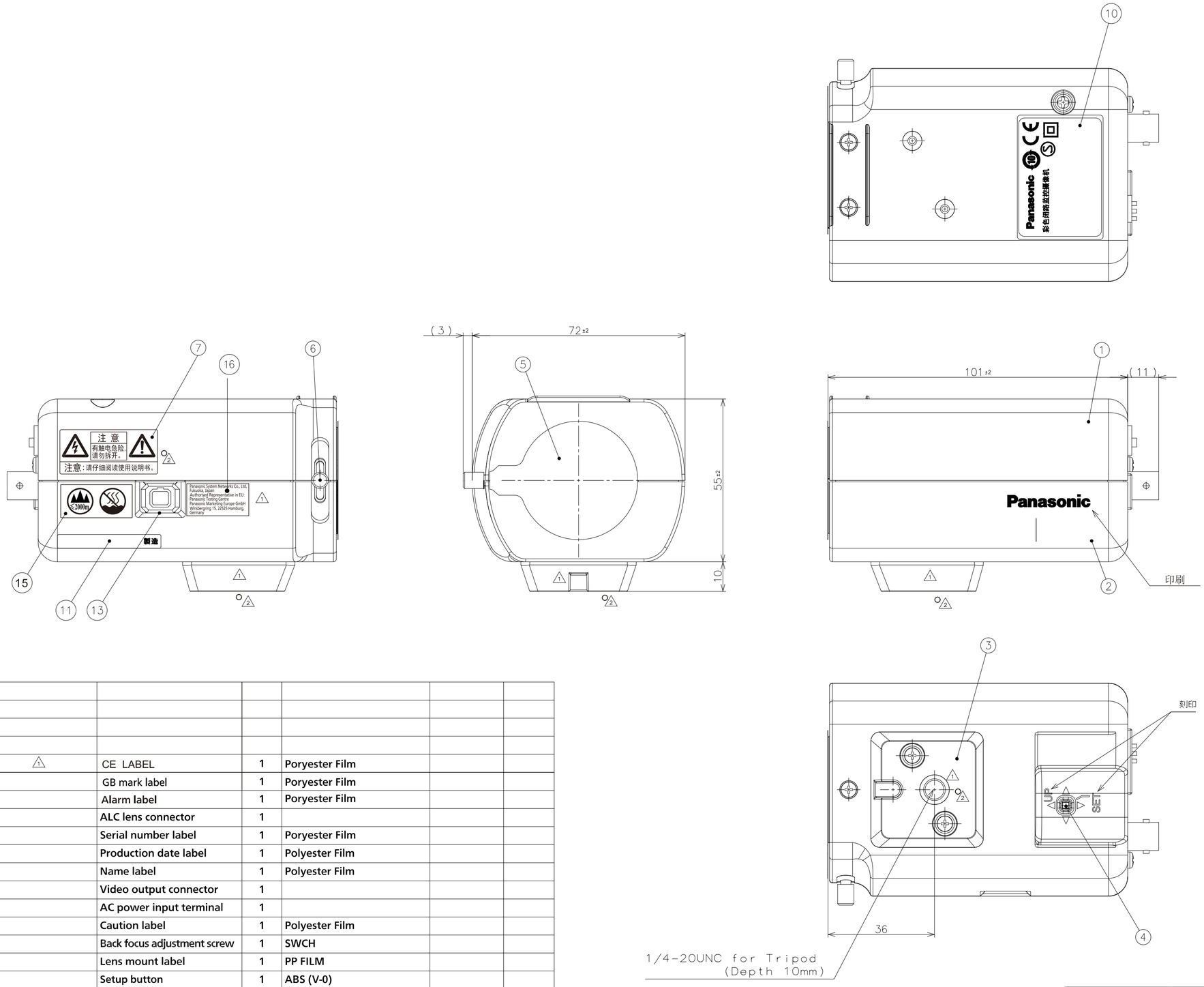

SYM.	ITEM OR PARTS No.	NAME	QTY	MATERIAL & SIZE	TREATMENT	REMARK
16	1	CE LABEL	1	Poryester Film		
15		GB mark label	1	Poryester Film		
14		Alarm label	1	Poryester Film		
13		ALC lens connector	1			
12		Serial number label	1	Poryester Film		
11		Production date label	1	Polyester Film		
10		Name label	1	Polyester Film		
9		Video output connector	1			
8		AC power input terminal	1			
7		Caution label	1	Polyester Film		
6		Back focus adjustment screw	1	SWCH		
5		Lens mount label	1	PP FILM		
4		Setup button	1	ABS (V-0)		
3		Tripod mount base	1	ABS/PC		
2		Lower case	1	ABS (V-0)		
1		Upper case	1	ABS (V-0)		

Unit:mm

REMARK			Weight: APPROX. 190 g	MODEL	WV-CP720/CH
		MATERIAL & SIZE	PROCESS	NAME	箱入規格/Main Assembly Standards <外観図>
SCALE	DESIGNED	DRAWN	CHECKED / APPROVED		
1 : 1	郝连喜 20140220	郝连喜 20140220	唐雷钧 20140220 / 高桥 20140220	DRAWING/ Part NO.	Page M-Mb1 of M-Mb1

A2

Panasonic System Networks Co.,Ltd.

REF.NO.	ISSUE 1-3	1